C.I.P.	6 mm Rem. (244 Rem.)	TAB.	I
		Date	84-06-14
	Country of Origin: US	Revision	02-05-15

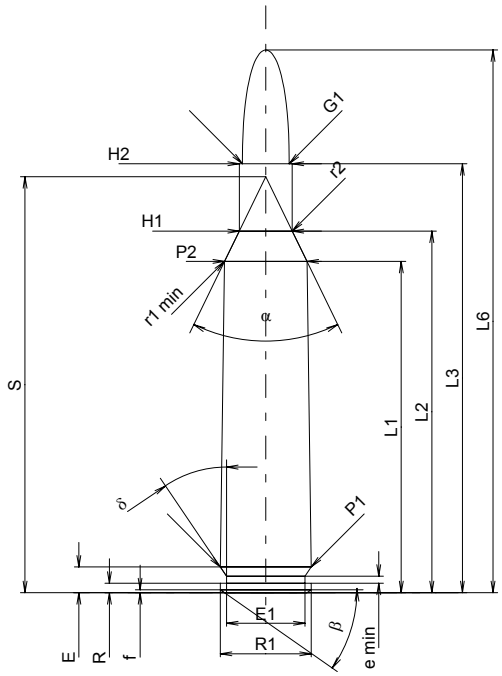

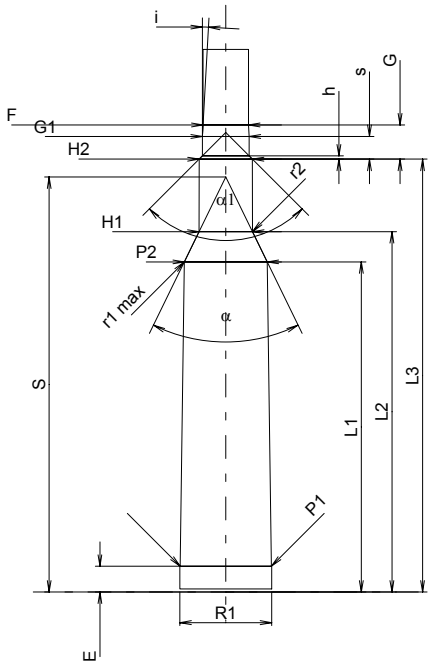

Scale 1:1

CARTRIDGE MAXI

Lengths

L1 1)	=	43.81	-0.20
L2 1)	=	47.81	-0.20
L3 1)	=	56.72	
L4	=		
L5	=		
L6	=	71.76	

Case Head

R	=	1.24
R1	=	12.01
R3	=	
E	=	3.40
E1	=	10.36
e min	=	0.94
δ	=	34°
f	=	0.38
β	=	35°

Powder Chamber

P1	=	12.01	
P2 1)*	=	10.91	-0.20

Junction Cone

α *	=	52°
S *	=	55.00
r1 min	=	0.64
r2	=	2.54

Collar

H1 *	=	7.01
H2 1)	=	7.01

Projectile

G1 1)	=	6.18
G2	=	
F	=	
L3+G 1)	=	61.24

Pressures (Energies)
Method Transducer

Pmax	=	4300	bar
PK	=	4945	bar
PE	=	5375	bar
M	=	25.00	
EE	=	3180	Joule

Miscellaneous Dimensions

Fe 1)	=	0.10
delta L	=	0.10

CHAMBER MINI

Lengths

L1	=	43.66
L2	=	47.66
L3 1)	=	57.25

Breech

R	=	
R1	=	12.14
R2	=	
R3	=	
r	=	

Powder Chamber

E	=	3.40
P1 1)	=	12.04
P2 *	=	10.96

Junction Cone

α 1)*	=	52°
S *	=	54.90
r1 max	=	0.64
r2	=	3.18

Collar

H1 *	=	7.06
H2 1)	=	7.04

Commencement of Rifling

G1 1)*	=	6.19
G 1)	=	4.52
α1 *	=	90°
h	=	0.43
s	=	3.00
i 1)*	=	3°
w	=	

Barrel

F 1)*	=	6.02
Z 1)	=	6.17

Grooves

b	=	2.29	
N	=	6	
u	=	228.60	
Q	=	29.48	mm²

Dimensions in << mm >>
Dimensions and Tolerances for Proof Barrels
see Appendix CR 1.

Notes: 1) Check for safety reasons
* Basic dimensions